Accessories program

Elevator rail lubrication system

1. Introduction

The simatec elevator rail lubrication system consists of a simatec elevator brush and an oil-filled simalube lubricator. The lubrication system specially developed for the elevator system requires little maintenance and offers a number of other advantages:

- Silent operation of elevators.
- The elevator rails are constantly lubricated by the elevator brush and at the same time cleaned of dirt.
- Optimal distribution of oil on the rails thanks to the special design of the lubrication channels and the continuous, steady dispensing of oil by the simalube lubricator.
- Easy installation thanks to the self adjusting mechanism of the spring loaded rail brushes. System can be used universally for all widths of rail from 5 to 16 mm and up to a depth of 25 mm.
- Automatic adjustment of brushes to uneven and misaligned rails.
- Easy setting of oil dispensing rate according to requirements thanks to adjustable simalube lubricator.
- Fast, clean replacement of the simalube lubricator without loss of oil.

2. Technical data

290.2042, Elevator brush small

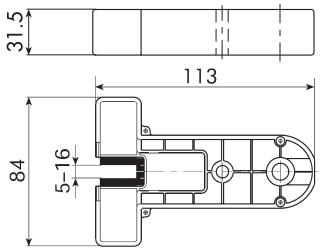

290.2039, Elevator brush

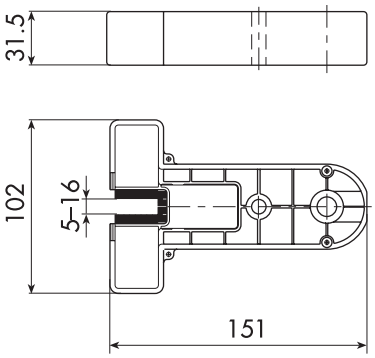

Width of rails:	5 to 16 mm (0.20 to 0.6 in)
Depth of rails:	25 mm (25.40mm)
Ambient temperature:	0 to +55 °C (32 to 131 °F) The lubrication system also works if exposed for a short time to extremely low temperatures of up to -20 °C (-4°F).
Speed:	up to max. 2.5 m/s (8.2 ft/s)
Lubricant:	Observe instructions of elevator manufacturer's recommendations. Only use liquid lubricants (no greases).
Fastening thread for lubricator:	G 1/4" female thread
Dimensions:	see scale drawings
Weight:	290.2039:175 g (0.4 lb) 290.2042:110 g (0.25lb)
Installation:	the lubrication system is fastened with an M8 screw on the rail shoe of the elevator car.
Packing unit:	1 piece

Accessories program

Elevator rail lubrication system

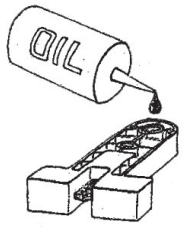

3. Installation and start-up

3.1 First installation of the simatec elevator rail lubrication system

1. Fill elevator brush housing with approx. 8 ml oil. Fill the oil carefully into the thread hole in order to prelube the internal oil supply. The oil will have soaked the felt and reached the brush zone after approx. 3 hours. Apply some oil to the bristles too. (Fig 1)

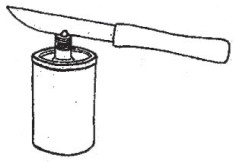

2. Cut off top of the protruding nipple on the non-return valve plug of the simalube lubricator, the opening is now visible. Do not remove the plug! The non-return valve plug prevents uncontrolled draining of oil. (Fig 2)

3. Screw lubricator into the G 1/4" thread in the elevator brush housing and tighten gently by hand. The thread should be fully screwed into the housing. In this way, the flange of the yellow non-return valve plug acts as a flat seal. (Fig 3)

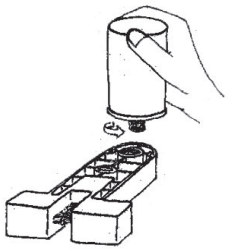

4. Start lubricator by setting the dial (using a size 3 mm Allen key) to the required dispensing time (in months).
   Under normal conditions, we recommend the following dispensing times:
   - clean and dry environment: 6–12 months
   - dirty and humid environment: 3–6 months

   (Fig. 4)

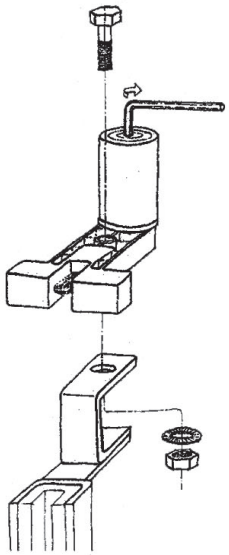

5. Mount the activated elevator rail lubrication system with an M8 screw, a lock washer and a nut on the handle of the rail shoe of the elevator car. The dispenser may face up or down, this does not affect proper functioning of the lubrication system. (Fig 5)

6. In order to ensure perfect functioning, ensure that the lubrication system brushes are centred around the elevator rail and that they have even contact.

Accessories program

Elevator rail lubrication system

3.2 Replacing the simalube lubricator

1. Detach the elevator rail lubrication system completely.
2. Check the elevator brushes for wear and replace if necessary.
3. Unscrew the empty lubricator.
4. Check that the internal oil distributor in the elevator brush housing is still adequately prelubed.
   If necessary refill with oil. (approx. 8 ml)
5. Proceed as described in 2) to 3) of 3.1 «First installation of the simatec elevator rail lubrication system».

4. Note

- In case of insufficient space, the lubricator may be installed at a decentralised location. The connection between the simalube lubricator and the elevator brush is made using hose Art. No. 290.2000. Use 1 quick connection Art. no. 290.1060 (on the lubricator) and Art.No. 290.1071 (on the brush).