Accurate packaging and filling valve systems.

adhesives
cosmetics
creams
grease
lubricants
inks
sealants

EFD®
A NORDSON COMPANY



Precision 725HF valve systems dispense low to high viscosity fluids up to 450ml/second.

Best for filling small bottles, foil packs and samples with lotions, perfumes and adhesives. Also used for potting electronics and applying braze pastes.





Features

- FDA-compliant wetted parts
- Autoclavable wetted parts (121°C)
- **Fully adjustable flow rates**
- Positive cut-off
- Cycle rate exceeds 400/minute
- <±1% repeat fill tolerance
- Low-maintenance design

www.efd-inc.com uk@efd-inc.com fax (0) 1582 664227 UK Freephone 0800 585733 Ireland Freephone 00800 8272 9444
Sales and service of EFD dispensing systems are available worldwide.

High flow valve systems

The complete system includes the 725HF dispense valve, ValveMate 7000 controller, the fluid reservoir and dispense nozzle.

Expert technical assistance and high quality standards ensure productive, trouble-free performance. EFD offers a full line of reliable dispensing systems to meet your specific application requirements.

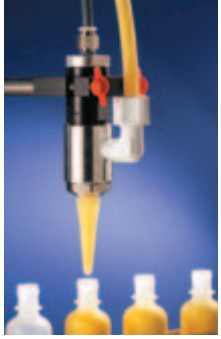

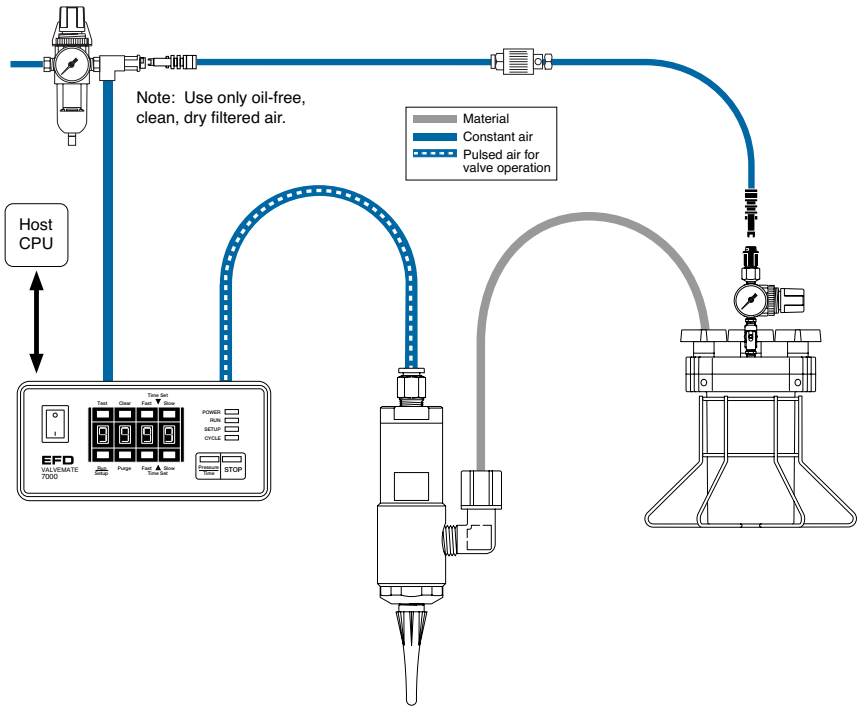

ValveMate™ 7000 Controller

Valve open time is the primary control of deposit size. The ValveMate controller puts push-button adjustment of valve open time where it needs to be — at the valve.

- Partner to Programmable Logic Controller (PLC)
- Easy deposit size control
- Increased production output
- End user convenience
- Maximum machine efficiency

Optional: XYZ Dispensing System

The EFD Ultra™ TT xyz dispensing system incorporates all functions of the ValveMate. Compact 3- or 4-axis tabletop system offers consistent deposit repeatability. Work area: 325x325x100 mm or 525x525x100 mm.

Fluid Reservoirs

EFD reservoirs are supplied with precision, constant-bleed regulators to ensure consistent fluid pressure to the valve.

Tank reservoirs are available in 1.0, 5.0 and 19.0 litre capacities.

Dispense Tips

Tip selection is critical to achieve optimum valve performance. 725HF Series valves are packaged with (6) 14 gauge Ultra™ smooth-flow tapered tips and (2) 1/4" NPT one-piece polyethylene nozzles.

725HF Series Valves

The advanced 725HF design provides positive cut-off by means of a slight pull-back at the dispense cycle end, ensuring accurate fill amounts.

Unique UHMW* polymer diaphragm replaces typical seals and seal maintenance, and ensures separation integrity of fluid from cylinder body.

725HF-SS **Size:** 108.7 mm x 31.1 mm diameter (4.28" x 1.225")
Weight: 309 g (10.9 oz)

725HF-A **Size:** 109.2 mm x 31.1 mm diameter (4.30" x 1.225")
Weight: 185 g (6.5 oz)

Maximum fluid pressure: 6.9 bar (100 psi)
Actuating air pressure required: 4.8 bar (70 psi)
Fluid inlet thread: 1/4 NPT
Fluid outlet: 1/4 NPT
Mounting: (1) 5/16-24 UNF or adjustable mounting block
Air cylinder body: Hard-coated aluminium
Fluid chamber: Type 303 stainless steel or acetal copolymer
Piston: Hard-coated aluminium
Spring: Stainless steel
Sealing head/diaphragm: UHMW* polymer, FDA-approved

All stainless steel parts are passivated.
*Ultra High Molecular Weight polyethylene

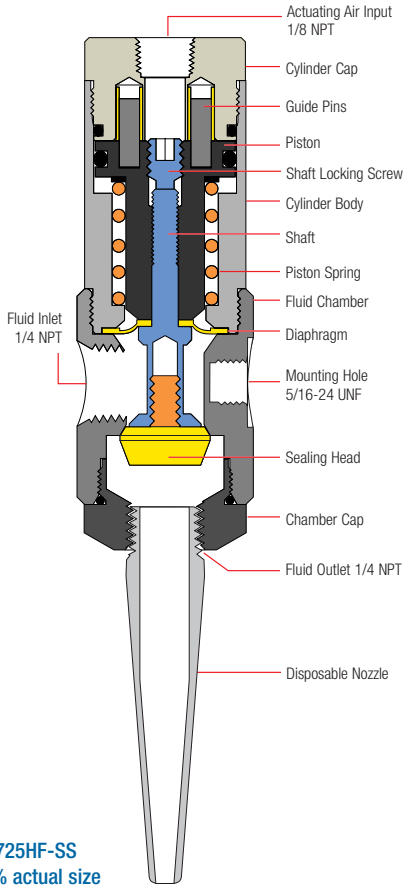

725HF-SS
75% actual size

EFD®
A NORDSON COMPANY

For application assistance or a no-charge evaluation system in the UK, phone 0800 585733.

EFD International Inc., a Nordson Company
14 Apex Business Centre
Boscombe Road
Dunstable, Bedfordshire LU5 4SB UK

telephone (0) 1582 666334 fax (0) 1582 664227
uk@efd-inc.com www.efd-inc.com
Ireland Freephone 00800 8272 9444
ireland@efd-inc.com

EFD and ValveMate are trademarks of EFD Inc. Teflon is a registered trademark of E.I. DuPont. ©2004 EFD, Inc.